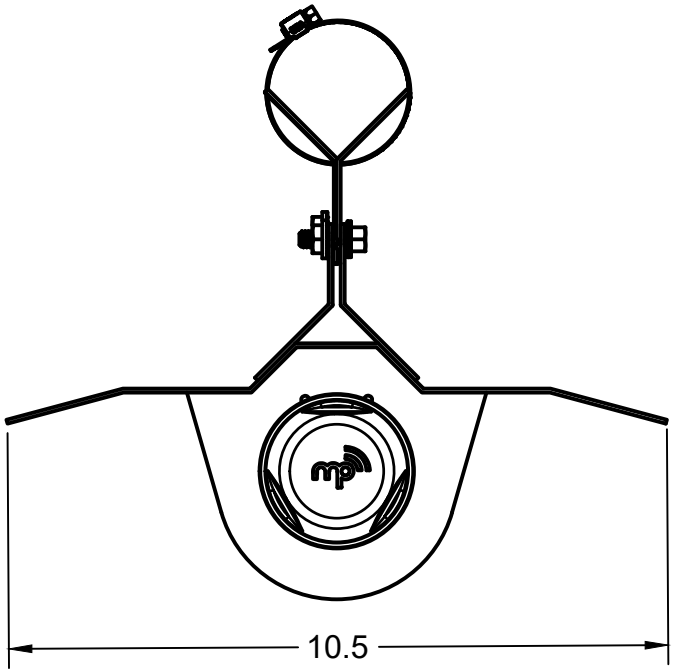

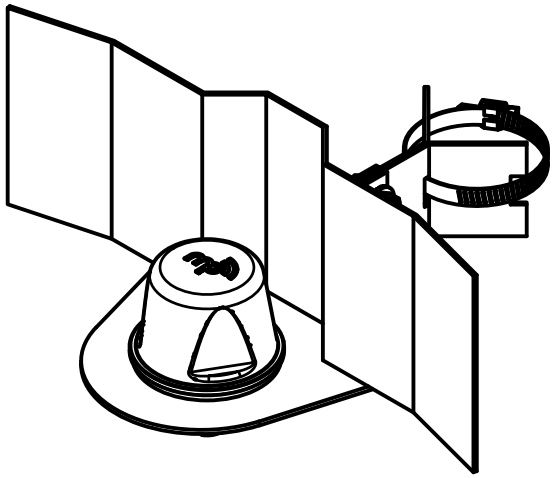

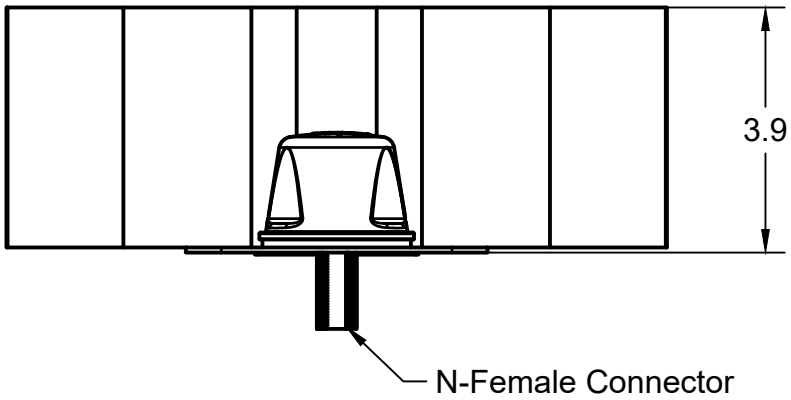

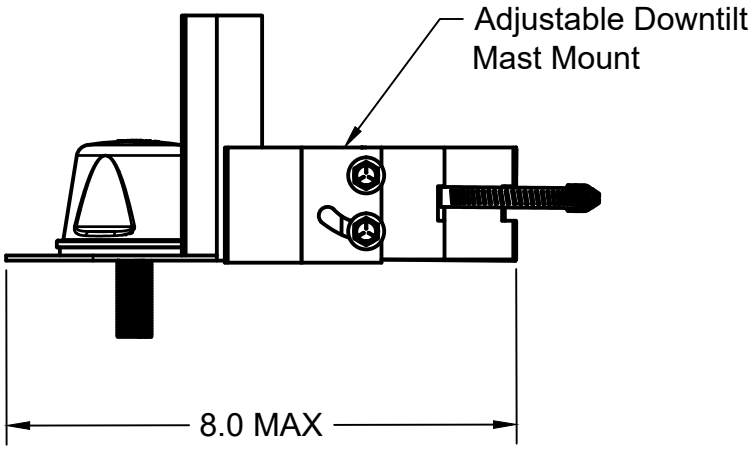

MP ANTENNA, LTD.
147 Eady Court
Elyria, Ohio 44035
www.mpantenna.com

THIRD ANGLE

DIMENSIONS ARE IN INCHES

	NAME	DATE
DRAWN	BM	1/24/2020

PROPRIETARY AND CONFIDENTIAL
THE INFORMATION CONTAINED IN THIS DRAWING IS THE SOLE PROPERTY OF MP ANTENNA, LTD. ANY REPRODUCTION IN PART OR AS A WHOLE WITHOUT THE WRITTEN PERMISSION OF MP ANTENNA LTD IS PROHIBITED.

DESCRIPTION:
2.4 GHz Sector
120 Degree
Mast Mount

PART NO.
08-ANT-0867-MAST-NF